TYPICAL EQUIPMENT NAMING CONVENTIONS:

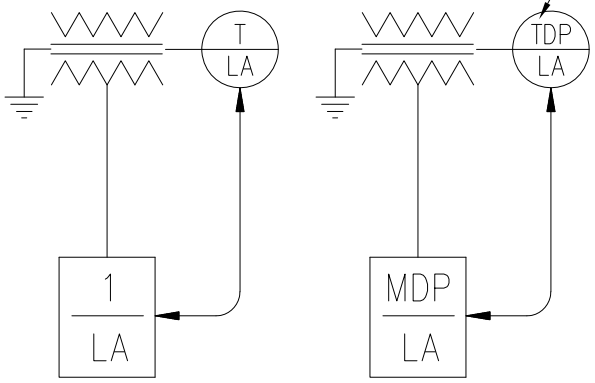

T = TRANSFORMER

150 KVA
480V PRI, 3P, 3W DELTA
208Y/120V SEC, 3P, 4W

PROVIDE KVA, PRIMARY VOLTAGE, SECONDARY VOLTAGE AND WINDING CONFIGURATIONS ON ONE-LINE.

NAME PANEL FIRST. PANEL 1/LA IS FED FROM TRANSFORMER T/LA.

PANEL MDP/LA IS FED FROM TRANSFORMER TDP/LA.

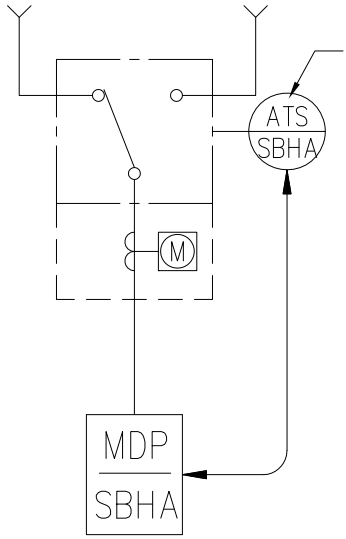

ATS = AUTOMATIC TRANSFER SWITCH

480V/277Y
4-POLE
400A
65 kA WCR
NEMA 1
OPEN TRANSITION

LIST VOLTAGE,
NUMBER OF SWITCHED POLES,
CONTINUOUS AMPERAGE RATING,
WITHSTAND CURRENT RATING (WCR),
ENCLOSURE NEMA TYPE,
AND OPEN OR CLOSED TRANSITION TYPE.

NAME PANEL FIRST. PANEL MDP/SBHA IS FED FROM AUTOMATIC TRANSFER SWITCH ATS/SBHA.