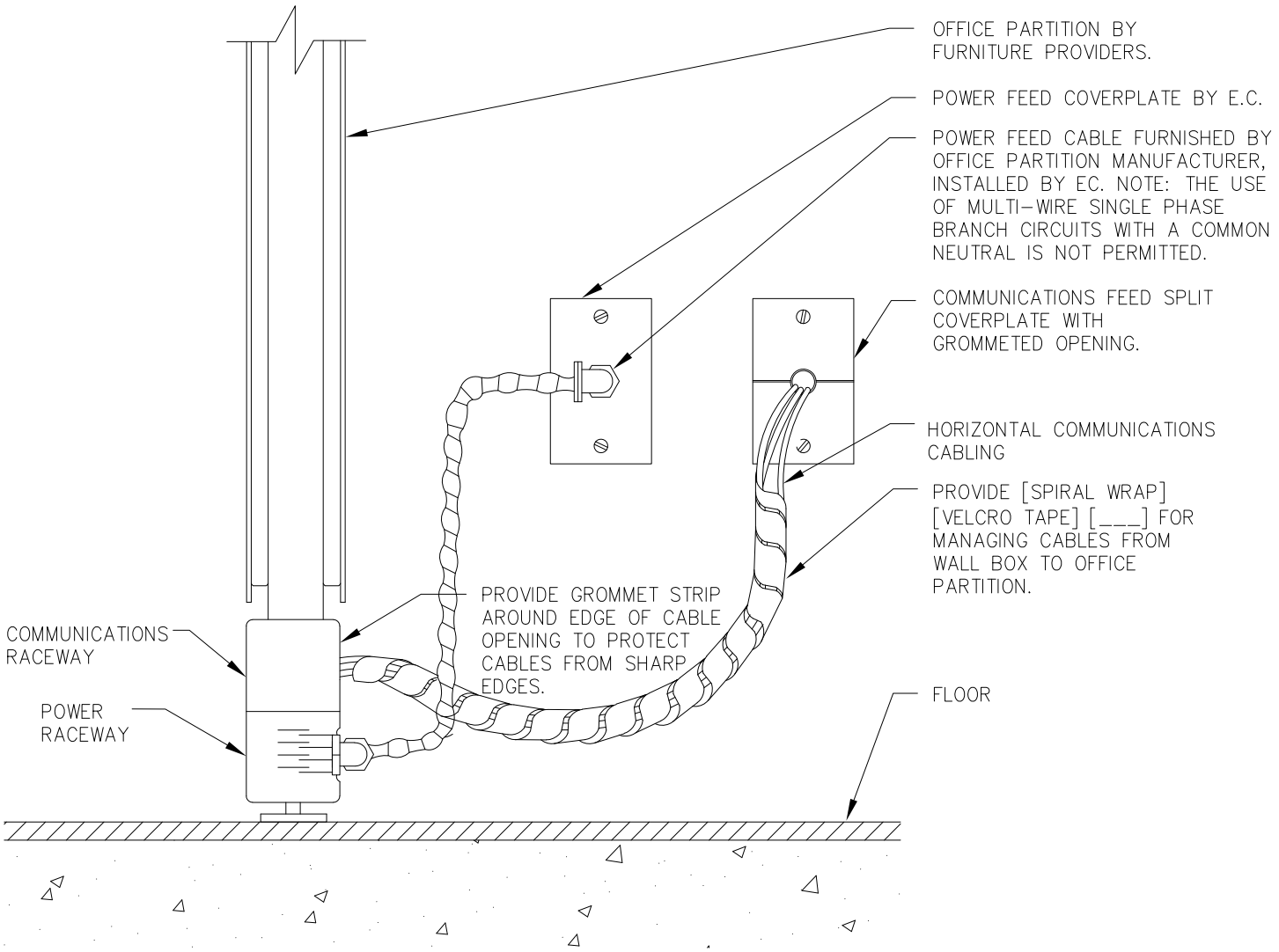

(X) OFFICE PARTITION FEED DETAIL–NO CONSOLIDATION POINT

SCALE: NOT TO SCALE